Host Utilities

TATA POWER

TATA POWER-DDL
Towards a Greener Tomorrow

BSES Rajdhani Power Limited

BSES Yamuna Power Limited

NPCL
NOIDA POWER COMPANY LIMITED

Knowledge Partner

Power Foundation of India

ORGANIZER

ISGF
India Smart Grid Forum

Supporting Ministries

MINISTRY OF POWER
GOVERNMENT OF INDIA

NITI Aayog

MINISTRY OF POWER
GOVERNMENT OF INDIA
CENTRAL ELECTRICITY AUTHORITY

DEPARTMENT OF
SCIENCE & TECHNOLOGY

AIDA
Collaboration | Innovation | Excellence

India
SMART UTILITY
Week 2026
10 – 14 March 2026, New Delhi

Session : Digital Energy Grids

Energy Transition Journey in Tata Power-DDl

Presented By

Tarun Batra, Head-D&IT

About Tata Power-DDL

India SMART UTILITY Week 2026 | ISGF India Smart Grid Forum

Government of National Capital Territory of Delhi

TATA POWER

Journey started 1st July'02 onwards

51:49

JV of The Tata Power Company Limited and Government of Delhi

25 years

License Period

510 Sq.KM

License Area of North and Northwest Delhi

21 Lakh

Customer base

TATA Power-DDL is an ISO 9001 (Quality Management Systems), ISO 14001 (Environmental Management Systems), ISO 45001 (Occupational Health and Safety), ISO 22301(Security and Resilience), ISO 27001(Information Security Management), ISO 31000 (Risk Management), ISO 50001 (Energy Management Systems), SA 8000 (Social Accountability), ISO 10002 (Customer Satisfaction - Guidelines for Complaints Handling), ISO 20400 (Sustainable Procurement) certified organization.

Context and Focus Areas for Energy Transition in Utilities

ISGF
India Smart Grid Forum

- **Overview:** Energy Transition through digital is transforming the landscape of utilities, revolutionizing how power is generated, distributed, and consumed. This transformation involves ***leveraging advanced technologies to optimize operations, enhance reliability, green energy revolution and meet evolving consumer demands***.

Key Components:

Smart Grids

Integration of sensors, meters, and automation technologies to improve grid efficiency, resilience, and enable real-time monitoring and control

Cybersecurity

Implementation of robust cybersecurity measures to safeguard critical infrastructure and data from evolving cyber threats

IoT & Data Analytics

Utilization of IoT devices and data analytics to gather insights, predict maintenance needs, and optimize asset performance.

Customer Engagement

Digital platforms provide real-time consumption data, personalized services, and energy management tools, p2P energy exchange, fostering energy efficiency and sustainability.

Renewable Integration

Digital platforms seamlessly integrate renewable energy sources, optimizing grid management and maximizing renewable energy utilization.

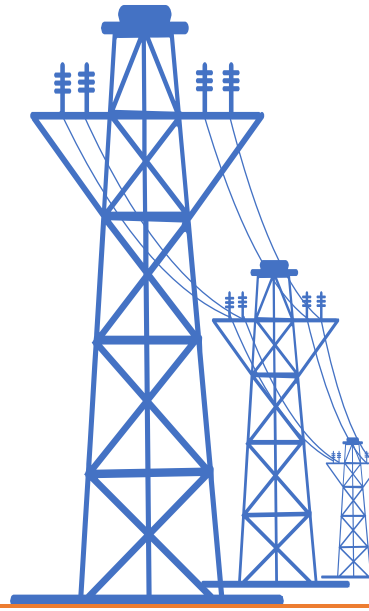

IT-OT Integrations

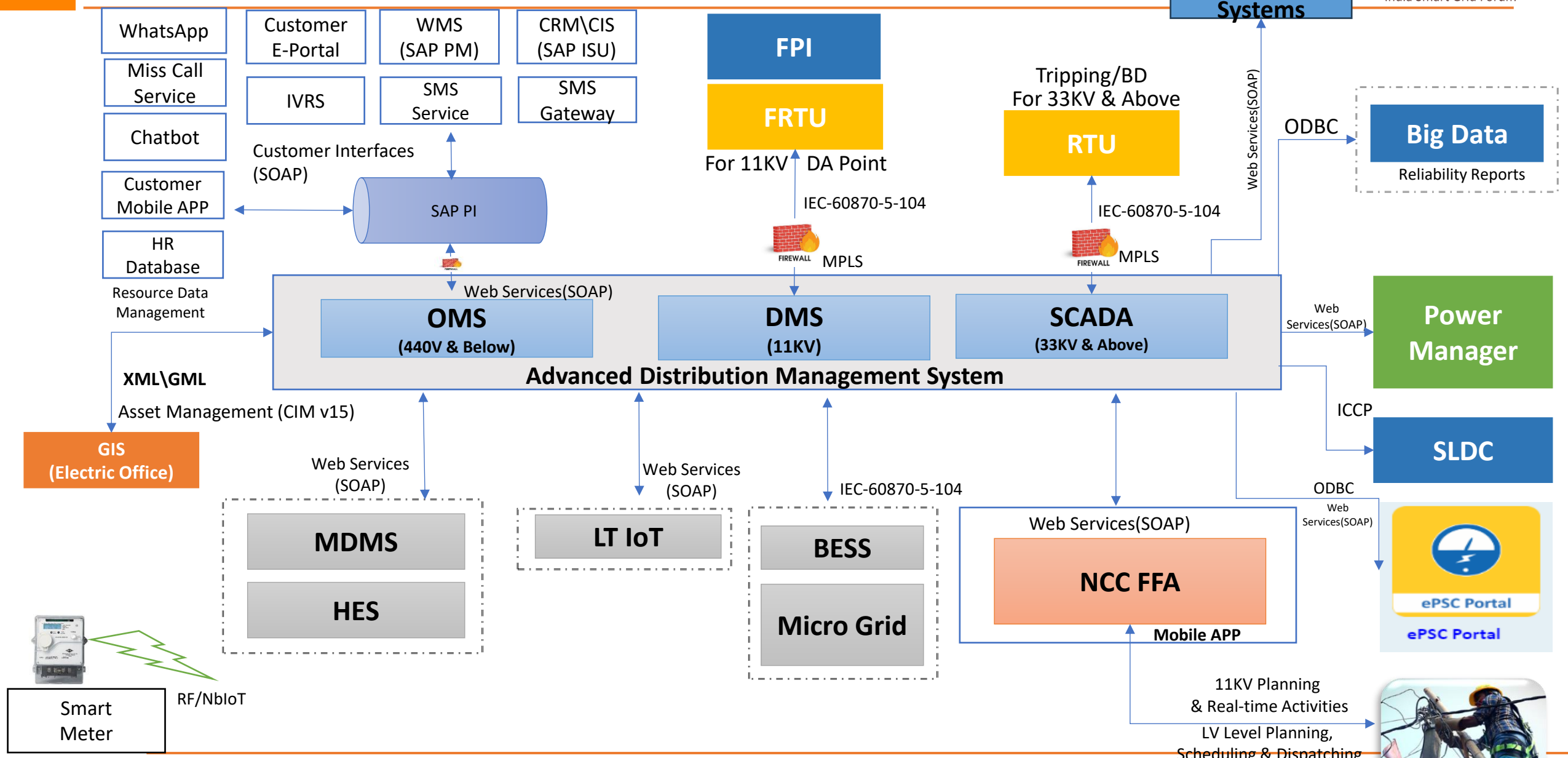

Journey Initiated with P2P Energy Exchange

- Inter State P2P implemented in recent conducted India AI summit between PVVNL, BRPL & TPDDL.
- Integration of billing & MDM system of utilities with Beckn ledger Platform.
- Multiple Trading Service Providers for Prosumers & Consumers to choose from.
- Awareness and marketing campaign Initiated.

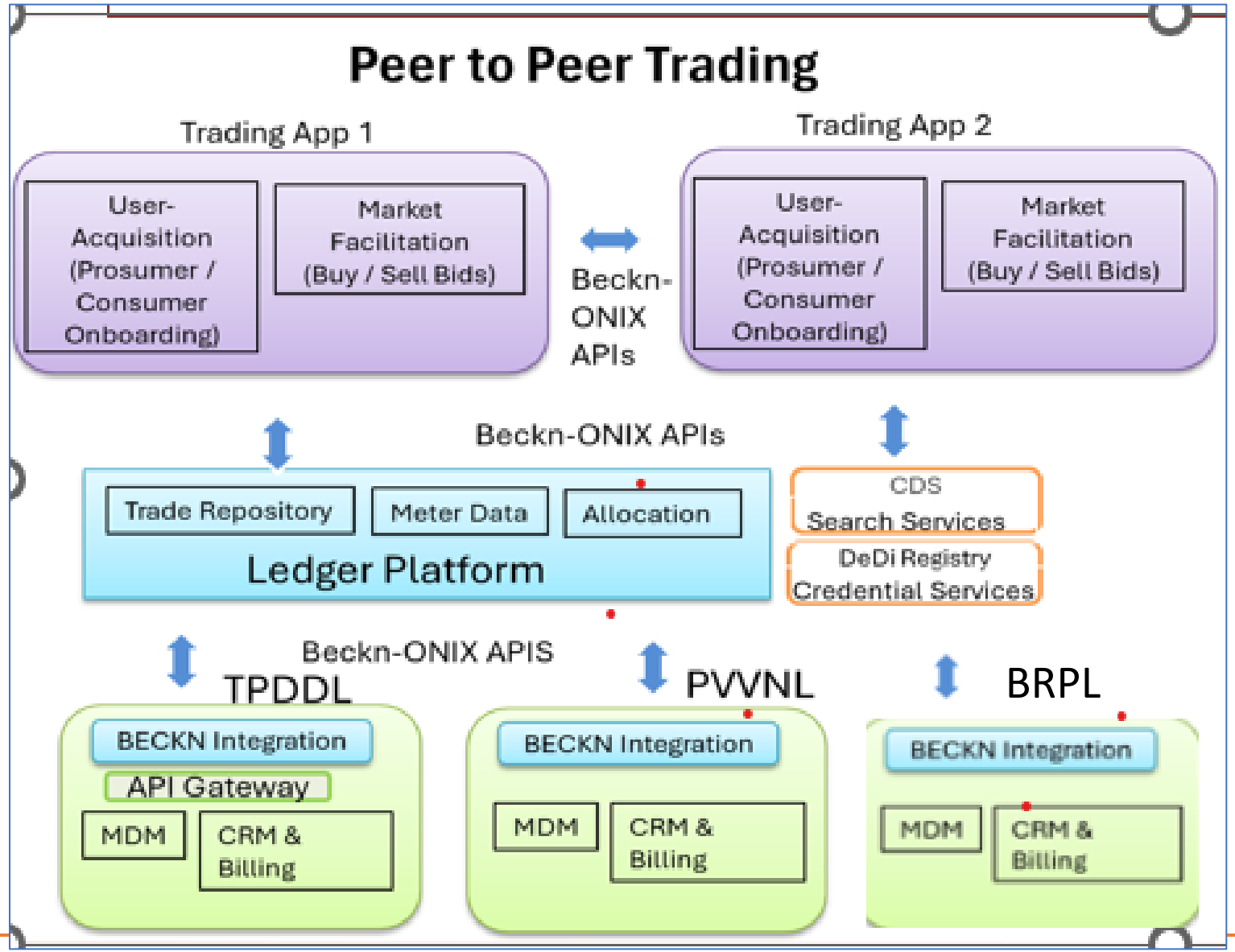

Plan for Strengthening Energy Transition

India SMART UTILITY Week 2026 | ISGF India Smart Grid Forum

Peer to Peer (P2P) Trading Platform

- ***Interstate (PVVNL, TPDDL, BRPL) P2P Platform***

DERMS Implementation

- Platform for DER for monitoring & Control

Technology Refresh of ADMS

- SCADA/DMS Application Deployment
- OMS linked with Smart metering MDM/HES

SMOC (Smart Meter Operation Center)

- Smart Metering Communication monitoring
- Interval Data availability for all Slots.
- DER Generation data

Intelligent Grids Data Hub

- Data Hub for OT & IT data
- Use Cases on Power Planner for demand forecasting, DER generation, Asset health & Maintenance, Investment Planning

Eneruni – Energy-as-a-Service

- Single platform for consumer for monitoring, trading and planning of energy resources
- Timeline: Q3 FY 27

Additional Uses Cases in Plan

- **Energy Disaggregation**
  - Appliance level Breakup
  - Appliance Category – Always On, Cooking, Heating, EV
  - Budget Threshold
  - Recommendations
  - Welcome Emails & Notifications
  - Integrated within WhatsApp & Customer App
- **Demand Flexibility for BDR vs ADR selection**
- **Intelligent Application performance Management (APM) for better performance**

Itemized Usage

Host Utilities

TATA POWER

TATA POWER-DDL
Towards a Greener Tomorrow

BSES
BSES Rajdhani Power Limited

BSES
BSES Yamuna Power Limited

NPCL
NOIDA POWER COMPANY LIMITED

Knowledge Partner

Power Foundation of India

ORGANIZER

ISGF
India Smart Grid Forum

India SMART UTILITY Week 2026

10 – 14 March 2026, New Delhi

Supporting Ministries

MINISTRY OF POWER
GOVERNMENT OF INDIA

NITI Aayog

MINISTRY OF POWER
GOVERNMENT OF INDIA
CENTRAL ELECTRICITY AUTHORITY

DEPARTMENT OF
SCIENCE & TECHNOLOGY

AIDA
Collaboration | Innovation | Excellence

THANK YOU

For discussions/suggestions/queries email:

tarun.batra@tatapower-ddl.com